Slimline 0 Plastic Knob
16mm Spigot N.m/Lbf.in

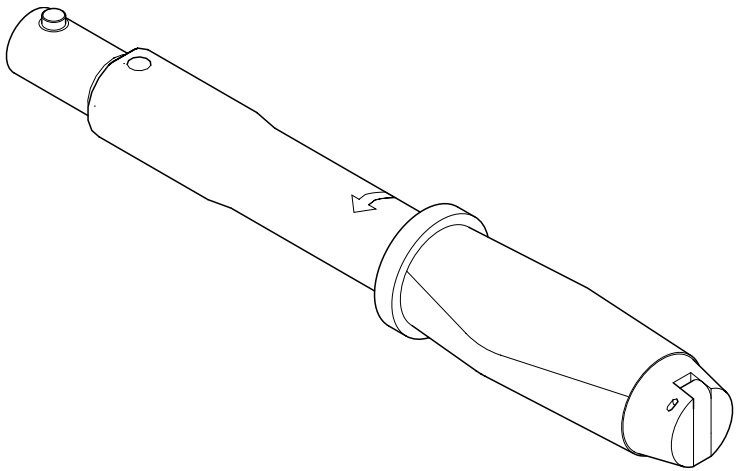

Norbar Torque Tools Ltd.

NORBAR TORQUE TOOLS LTD Beaumont Road, Banbury, Oxon. OX16 7XJ UNITED KINGDOM
Tel: +44 (0) 1295 270333 Fax: +44 (0) 1295 753643 http://www.norbar.com

SL0 9x12 Female N.m/Lbf.in

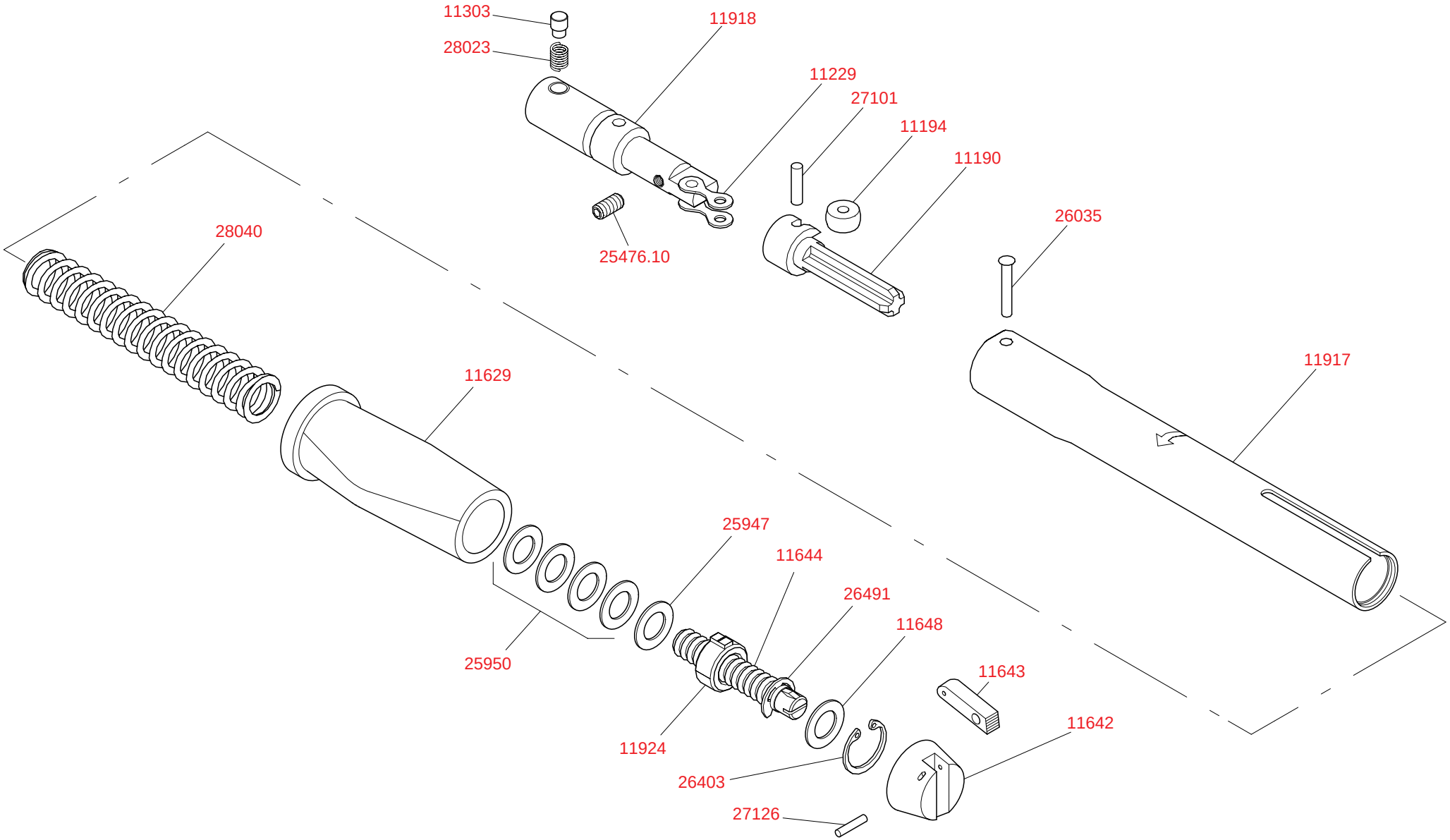

Click on part number to add to billing list

SL0 9x12 Female N.m/Lbf.in

PART No	QUANTITY	DESCRIPTION
11190	1	TRANSVERSE LINK NYLON
11194	1	ROLLER S/LINE AND PROF
11229	1	CHAIN LINK WITH PINS+LINK
11303	1	RETAINING PLUNGER
11629	1	HANDLE PLASTIC FOR SL0
11642	1	PLASTIC ADJUSTING KNOB SL0
11643	1	PLASTIC KNOB ADJUSTING ARM SL0
11644	1	ADJUSTING SCREW SL0 PLASTIC KNOB
11648	1	WASHER THRUST SLIMLINE TW
11917	1	BODY TUBE SL0
11918	1	PRIMARY LEVER SL0 T/H 16mm DIA SPIGOT
11924	1	ADJUSTING NUT SL0
25476.10	1	SSS GRUB M5 x 10mm LONG
25947	1	WASHER
25950	4	THRUST WASHER SL0
26035	1	RIVET SEMI-TUBE FOR SL0
26403	1	CIRCLIP 17mm INTERNAL ROUND EYE
26491	1	SPRING CLIP 8-11mm DIA EXTERNAL
27101	1	NEEDLE ROLLER 3.5mm DIA x 13.8mm
27126	1	NEEDLE ROLLER 2.5mm DIA x 11.8mm
28023	1	SPRING/COMP 6.22mm DIA x 7.94mm x 0.81mm
28040	1	SPRING 16.51mm DIA x 97.53mm